SYM	ECN NO	CHANGES	DATE	SIGN	APPR.
1					

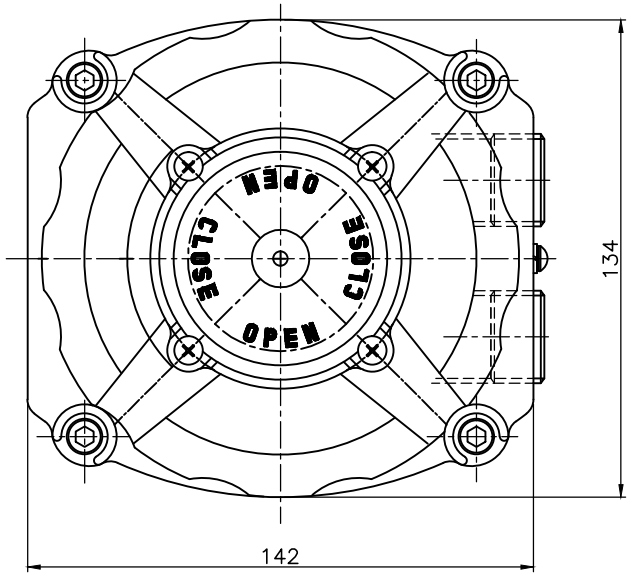

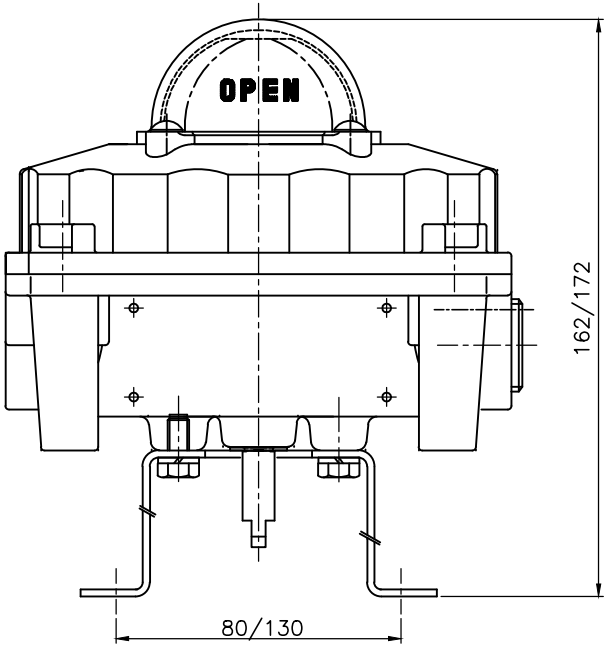

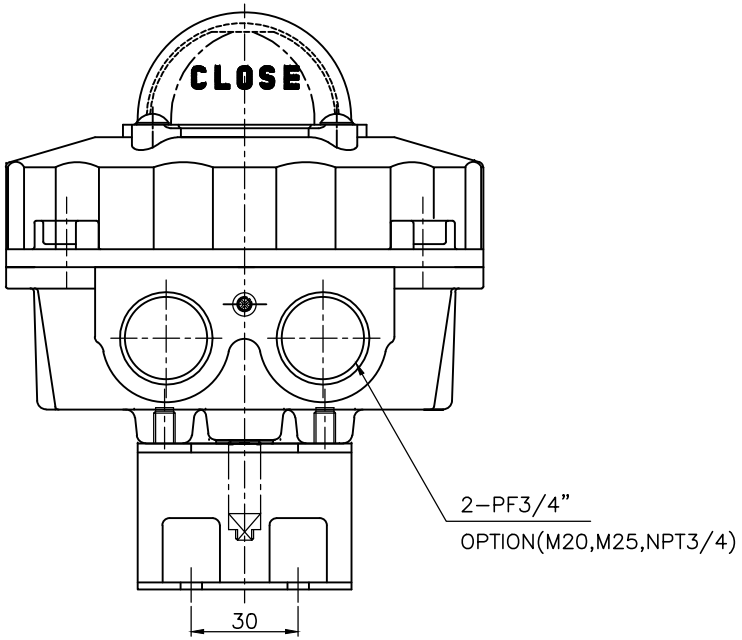

ITS03XX	1
APP'L,FILE	

MACHINE CUT

COMMERCIAL TOLERANCES			DATUMFACE & HOLE TOLERANCES		
OVER	TO		OVER	TO	
0.5	6	±0.1	0	50	±0.010
6	30	±0.2	50	180	±0.015
30	150	±0.3	180	360	±0.020
150	315	±0.5	360 이상		±0.025
315	1000	±0.8			

i-Tork CONTROLS
http://www.i-tork.com

DRAWN	DESIGN	CHECKED	APPROVER
M.S.YANG	C,J,CHU		

PART NAME: EXP P.M. SWITCH LAY OUT

MATERIAL		PROJ.	
DIMENSION mm	ISSU. DEPT. ITCDR	HEAT TREAT.	SURF. TRET.
SCALE 1 / 1	DATE '05.06.07	SIZE A3	1 / 1

DWG NO: ITS0300-10000-B