Hahn Part Number: 28-039QB
G 22 40 0200 9 0714 GA56 AZ20 04000N /1/5/Si

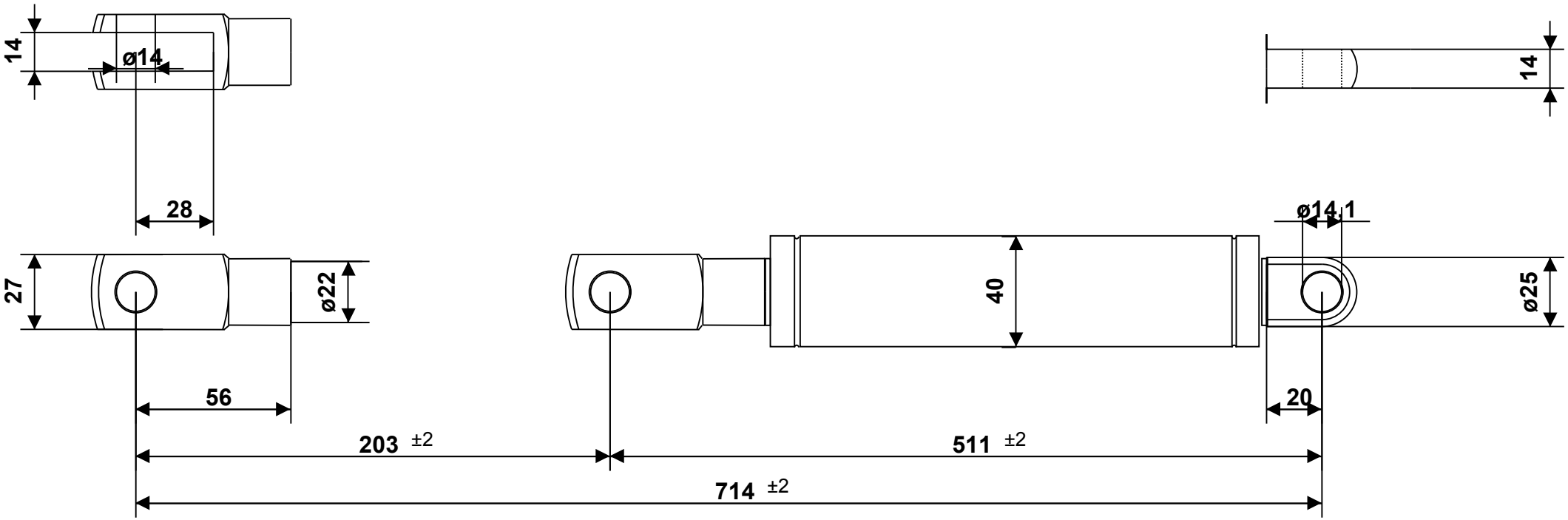

Intended for internal use and customer / Tolerance of ext. length: +/- 2mm - Dimensions without tolerance: per DIN ISO 2768-1 -c (ISO 2768 -c) - For Information Only
Force tolerance: F1 >= 1000N: +/- 5%; < 1000N: +/- 10%, min.: +/- 10N, max.: +/- 50N - Unregistered Copy, Print-out or file not subject to modification service.
End fitting orientation is random and not represented by drawing unless specified - Observe disposal instructions - Not true to scale

HAHN GASFEDERN A STABILUS COMPANY	Please note our technical instructions			Assembly/storing with piston rod down	
23. July 2024 / Auto-Printservice	No opening-no heating-high pressure				
Made in Germany	**Part**	**Dimension**	**Material / Surface**	**Fitting**	**Progr.:31,80 %**
Drawing owned by Hahn Gasfedern GmbH	Piston rod	Ø22mm	Stahl, hartverchromt	GA56 M14x1,5 Ø14	
[redacted]	Cylinder	Ø40mm	Stahl,schwarz	AZ20 Ø14,1 t=14	
				Configuration ID : 10055244-	